BREAK ALL SHARP EDGES

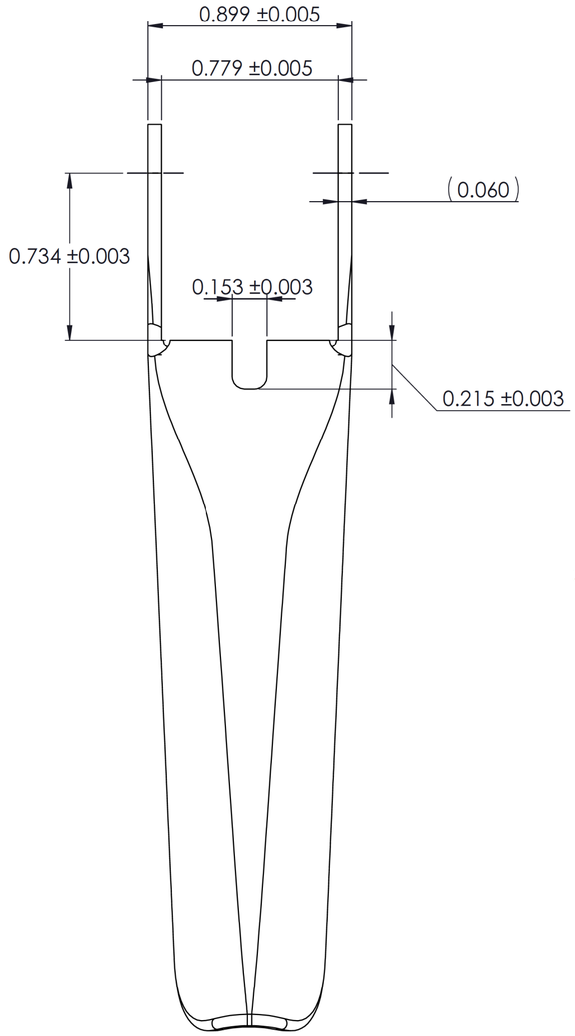

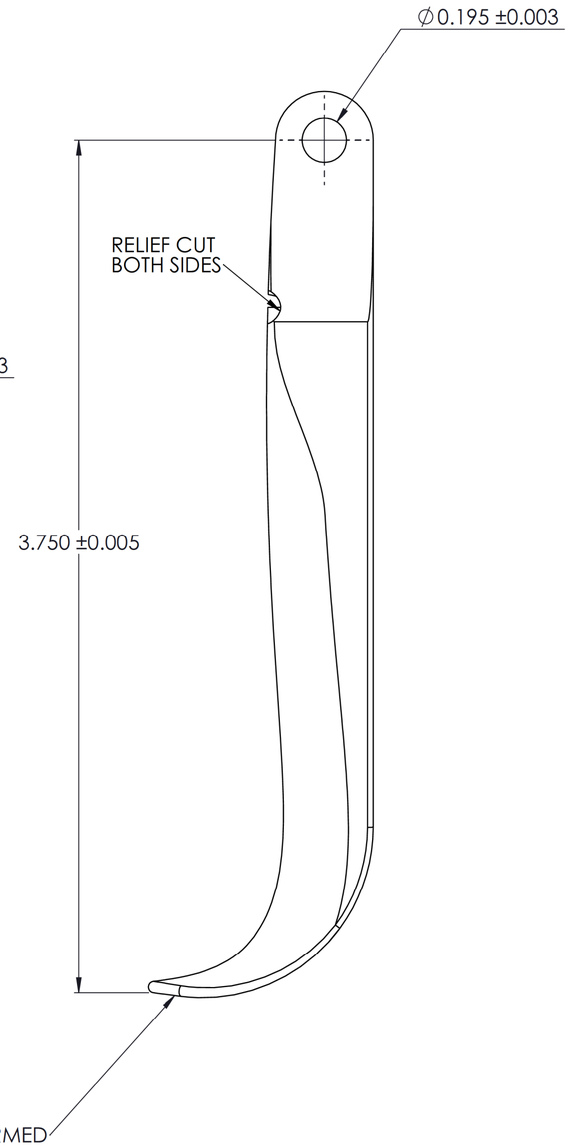

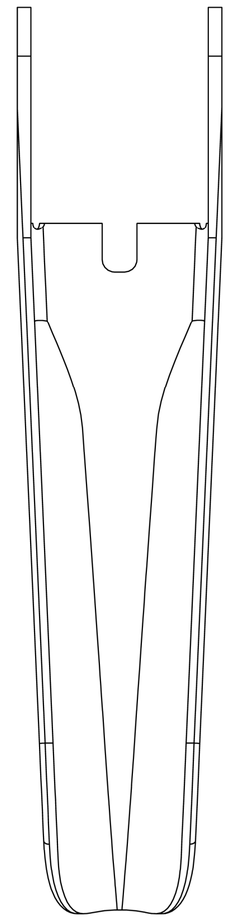

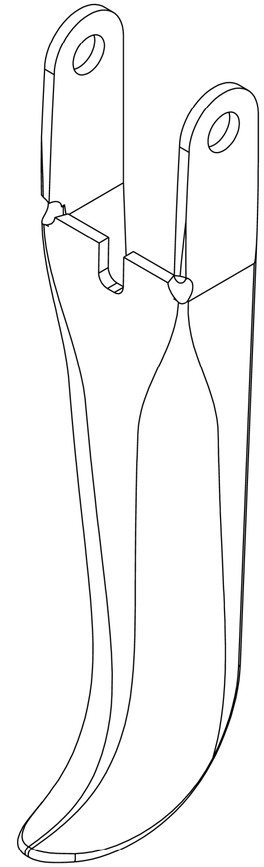

REVISIONS			
REV	DESCRIPTION	DRFT	DATE
5	MODIFIED TO MATCH NEW TRIGGER PIN LOCATION ON FRAME	BJH	2018-04-24
6	TIGHTEN FIT IN ASSEMBLY. ADJUSTED TOLERANCES	BJH	2018-11-29
A	16 GAUGE CARBON STEEL. AJDUSTED TOLERANCES. RELEASE FOR PRODUCTION	BJH	2019-04-11
B	ADDED POWDER COATING INFORMATION	BJH	2019-05-06
C	INCREASED HEIGHT OF 'BRIDGE' & NEEDLE GROOVE TO FIT WITH NEW POPPET LENGTH. CHANGED TO BLACK NICKEL PLATING	BJH	2019-11-18
D	INCREASED NEEDLE GROOVE WIDTH. CHANGED TO ELECTROLESS NICKEL PLATING	BJH	2020-02-06
E	CHANGED TO TITANIUM CARBIDE COATING	BJH	2020-03-04
F	ADDED RELIEF CUTS AND CHANGED INTERIOR RADIUS TO BETTER REPRESENT CURRENT PRODUCTION PARTS.	BJH	2025-07-09

DISTRIBUTION CODES		DRFT B. HAISLET	DATE 4-24-2018	MFG A. PEDERSON	DATE 4-24-2018
		CHKD B. HAYWARD	DATE 4-24-2018	APPVL	DATE
DIVISION AUTOMOTIVE AFTERMARKET		DIVISION CODE			
SCALE 2:1		TOLERANCES EXCEPT AS NOTED			
THIRD ANGLE PROJECTION		INCHES .0 ± .1; .00 ± .02; .000 ± .005; .0000 ± .0002		TITLE VOLTAIRE - TRIGGER	
INTERPRET PER ASME Y14.5 - 1994		MILLIMETERS 0 ± .5; .0 ± .25; .00 ± .10; .000 ± .050			
MAX SURFACE ROUGHNESS 125	☐ ALL SURFACES ☒ MARKED ONLY	ANGLES ± 1°		CAGE NUMBER	SIZE C
DRAWING NO. 78-8133-9131-1	REV. F	MODEL	DET. LISTS ☐ YES ☒ NO	SHT 1 OF 1	

NOTES:
1. MATERIAL: 16 GAUGE 304 STAINLESS STEEL
2. SURFACE FINISH: NA
3. POST PROCESSES: TUMBLE TO BREAK EDGES. TITANIUM CARBIDE PVD COATING: 2-4 MICRONS THICKNESS
4. PART MUST BE FREE OF BURRS AND VISIBLE SURFACE DEFECTS EXCEPT AS NOTED.
5. DIMENSIONS SHOWN ARE FOR REF. OR INSPECTION PURPOSES ONLY. FABRICATION TO BE CREATED FROM SOLID MODEL DATABASE. EXEPT WHERE OTHERWISE NOTED, TOLERANCES FOR ALL FEATURES SHALL BE KEPT TO +/- 0.010".
6. CAD DATABASE IS CONTROLLED AND MAINTAINED NO REVISIONS TO THIS PART ARE PERMITTED WIHTOUT APPROVAL.
7. CIRCLED DIMENSIONS ARE CRITICAL INSPECTION DIMENSIONS.
8. DIMENSIONS APPLY AFTER ANY POST PROCESSES UNLESS OTHERWISE NOTED.